UniTabE: A Universal Pretraining Protocol for Tabular Foundation Model in Data Science

Yazheng Yang[1], YuQi Wang[1], Guang Liu[2], Ledell Wu[3], Qi Liu[1]

The University of Hong Kong[1], Beijing Academy of Artificial Intelligence[2], Creatify AI[3]

香 港 大 學
THE UNIVERSITY OF HONG KONG

Introduction

- We introduce UniTabE, specifically designed to offer meticulous feature processing tailored to tabular data, augmenting the scalability to an extensive array of tasks for downstream applications.
- We have built an extensive tabular dataset for large-scale pretraining. The results elucidate the practical efficacy of our approach in predictive tasks of data science.

Pretraining Objectives

Masking Objective

Input:

psvolfilm	pcut	pcut	pcut	Timestamp	pcut	psvolfilm	psvolfilm
0.88085	-0.02716	-0.46049	906.37207	5.924	136122816.0	288624243.0	5521.72217
1.10703	-0.00099	0.55356	-4164.50488	[MASK]	136124253.0	288622077.0	4150.10059
0.97426	-0.04228	0.62234	-2770.6145	5.428	136124555.0	288621753.0	3317.0603
0.92573	0.04246	-0.57147	549.31641	1.912	[MASK]	288607277.0	5569.54053
-0.45747	136123573.0	0.01218	5521.72217	288625307.0	6749.7251	0.79271	6.116
4116.43945	0.648	136116864.0	0.01266	288602476.0	3050.28613	-0.08359	0.75895
...	...	...	...	...	...	...	...

Prompt: fill in the missing value, Timestamp:

Target: 5 . 5 1 6

Contrastive Learning Objective

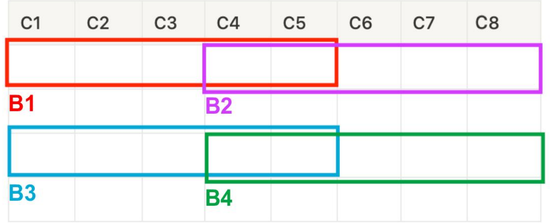

Model Architecture

TabUnit

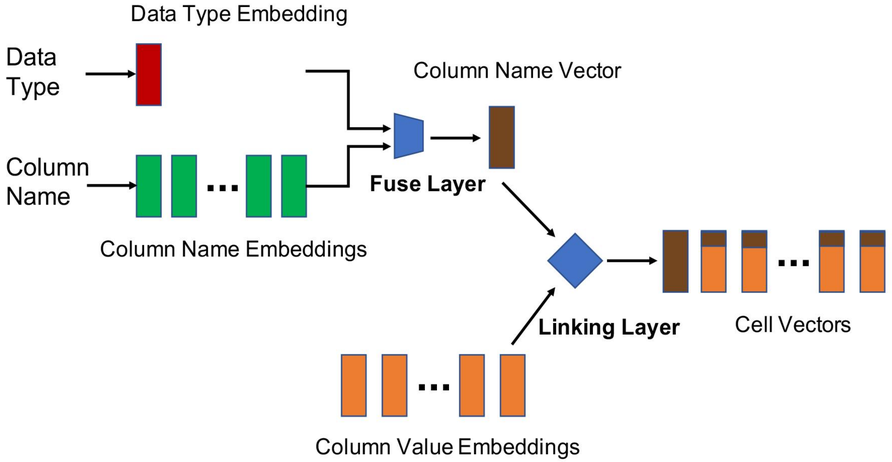

Overall Architecture

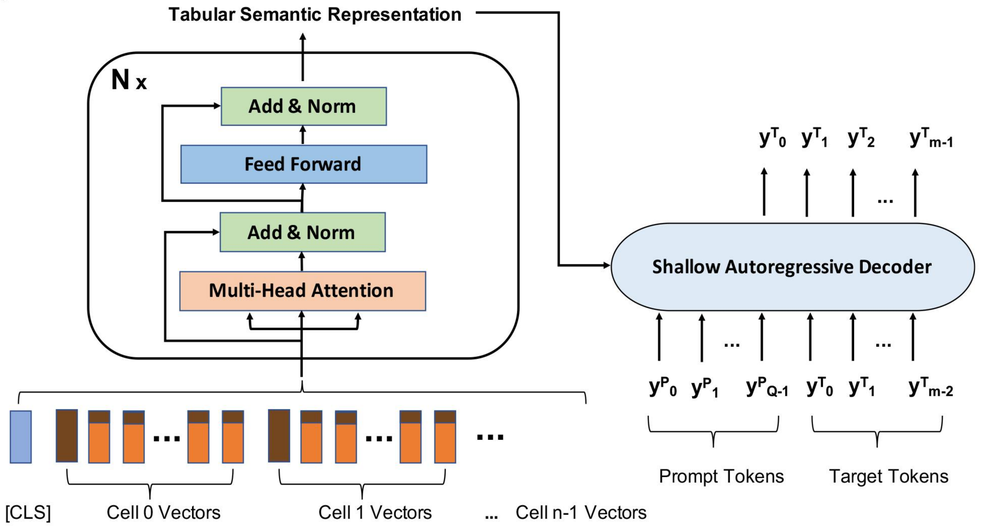

Massive Pretraining Corpus

We collect massive tables from Kaggle covering around 300 domains to construct our pretraining corpus.

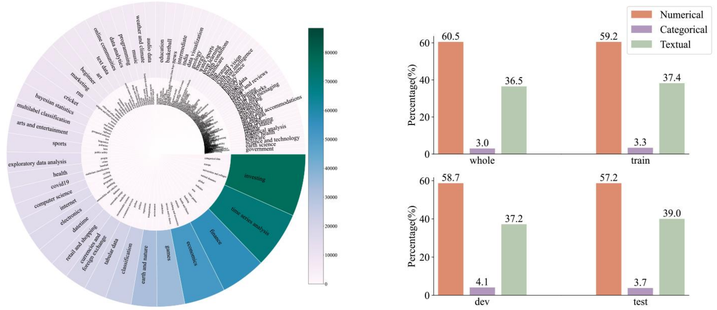

(a) Domains Distribution (b) Data Type Distribution

Results on Classification Tasks

Method/Dataset	CG	CA	DS	AD	CB	BL	IO	Avg.
XGBoost	0.78	0.93	0.54	**0.91**	0.87	0.82	0.71	0.79
NODE [Popov et al., 2019]	0.65	0.85	0.58	0.90	0.70	0.83	0.67	0.74
AutoInt [Song et al., 2019]	0.77	0.93	0.57	**0.91**	0.82	**0.84**	0.72	0.79
Tapas [Herzig et al., 2020]	0.77	0.92	0.63	**0.91**	0.87	**0.84**	0.70	0.81
TaBERT [Yin et al., 2020a]	0.72	0.88	0.54	0.90	0.71	0.82	0.66	0.75
TabTransformer [Huang et al., 2020]	0.76	0.92	0.56	**0.91**	0.82	0.82	0.71	0.79
FT-Transformer [Gorishniy et al., 2021]	0.77	0.93	0.58	**0.91**	0.85	**0.84**	0.71	0.80
TabNet [Arik and Pfister, 2021]	0.49	0.48	0.48	0.90	0.53	0.79	0.62	0.61
TUTA [Wang et al., 2021]	0.74	0.92	0.61	0.81	0.74	0.83	0.65	0.76
TransTab [Wang and Sun, 2022]	0.73	0.86	0.52	0.90	0.80	0.71	0.73	0.75
TransTab-LSTM	0.70	0.85	0.56	0.90	0.72	0.83	0.73	0.76
TabPFN [Hollmann et al., 2022]	**0.79**	0.93	0.62	0.88	0.78	0.81	0.70	0.79
GANDALF [Joseph and Raj, 2023]	0.78	0.92	0.63	**0.91**	0.84	**0.84**	0.71	0.80
Llama2 13B [Touvron et al., 2023]	0.77	0.92	0.65	**0.91**	0.84	0.83	0.68	0.80
UniTabE scratch	0.76	0.93	0.62	**0.91**	0.85	**0.84**	0.74	0.81
UniTabE + XGBoost	**0.79**	0.93	0.60	**0.91**	**0.88**	0.83	0.74	0.81
UniTabE finetune	**0.79**	**0.94**	**0.66**	**0.91**	**0.88**	**0.84**	**0.76**	**0.83**

Contact information

yangyazh@connect.hku.hk